Serial computer interface (RS 232)
for win**DIM/DALI**

DALI SCI

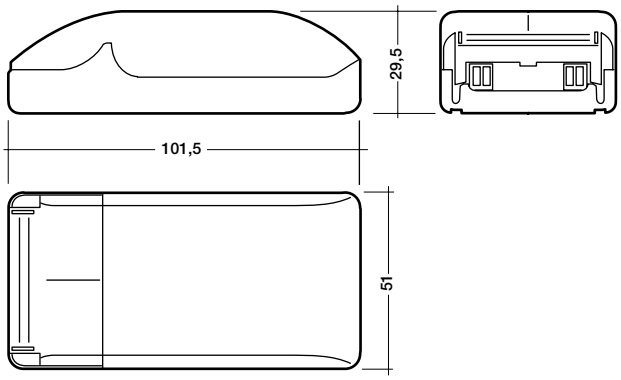

Functional description

- The interface module DALI SCI is used to connect Personal Computers with winDIM software directly to the DALI network.
- The DALI SCI and winDIM software allow you to both address and program a wide range of sophisticated DALI functions, as well as providing a user-friendly interface.

Installation

- The DALI SCI is connected to the RS 232 serial interface of a Personal Computer and interfaces via an opto-isolated connection on to the DALI signal line.
- The DALI SCI must not be connected to the mains. Its supplied directly via the DALI signal line and RS 232 interface.
- DALI signals are not SELV. Therefore the same procedures should be applied as working with mains voltage.

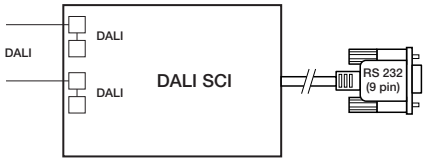

Circuit diagram

Type		DALI SCI
article number		24033463
supply	-	via DALI signal line and RS 232
current	-	6 mA
input	1	RS 232 (Personal Computer)
output	-	DALI
temperature	permitted ambient temperature	0 °C – 50 °C

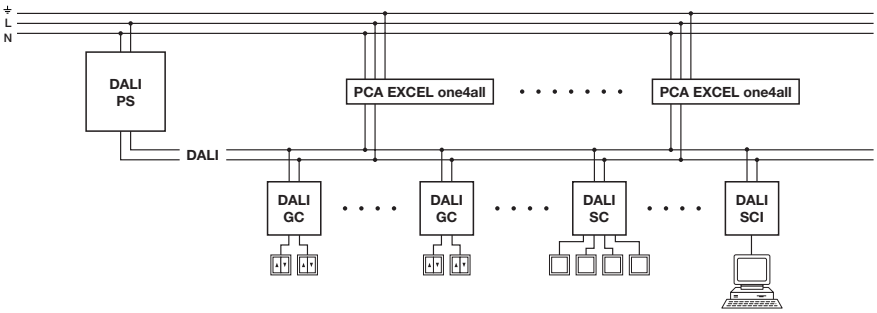

TRIDONIC.ATCO